Spare Part List & Exploded View Aquarea DHW Heat Pump Wall Hung
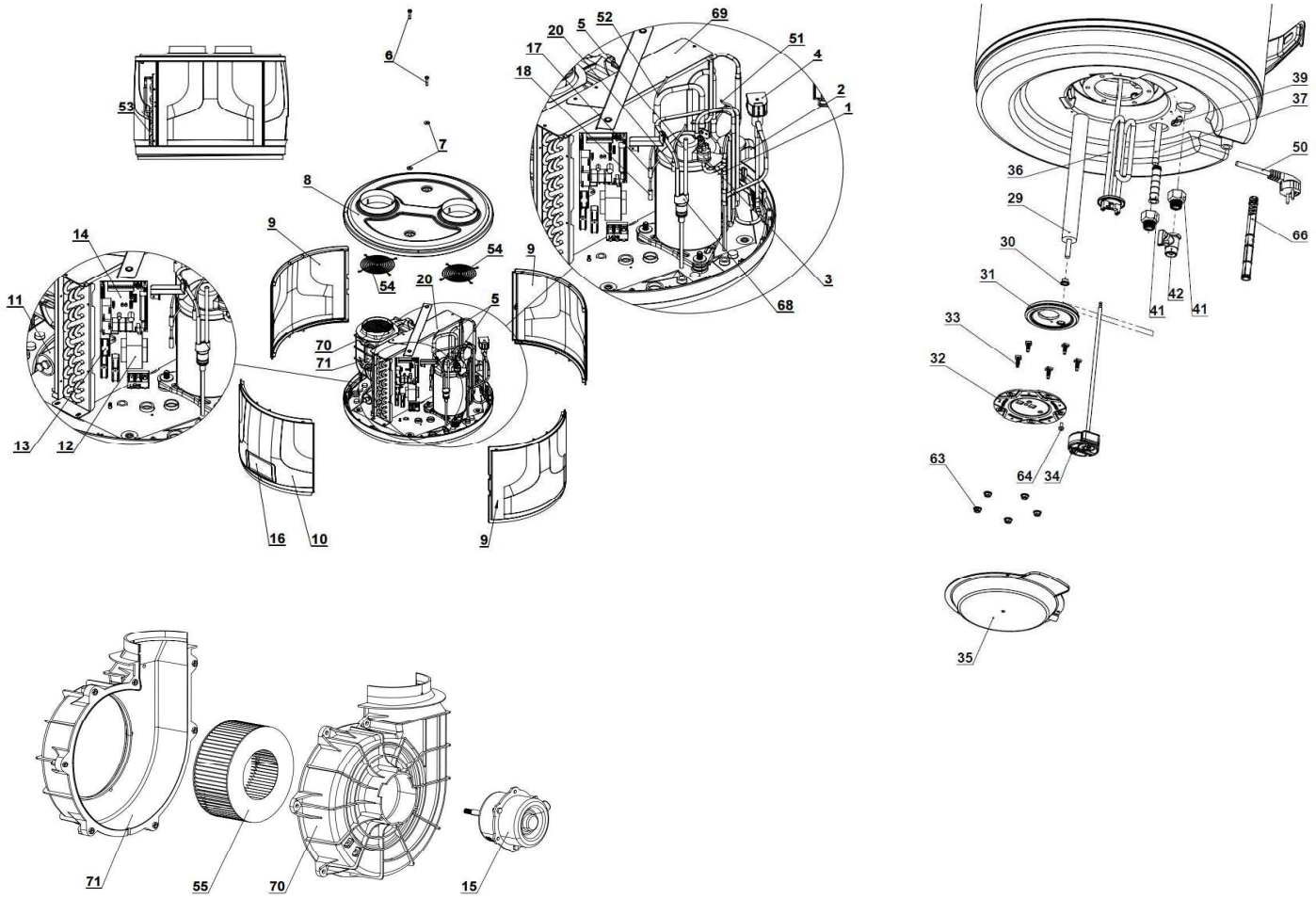
Part Number	Ref No.	Part Reference	P-DHW100AE5	P-DHW150AE5
109603	16	Control display 4.21 PS	•	•
208057	10	Set Panel front 4.21	•	•
207903	9	Set Panel back/lateral 4.21	•	•
207905	8	Set Panel top 4.21	•	•
208064	17,18	Set Temp. sensor group 100WH 4.21	•	
208065	17,18	Set Temp. sensor group 150WH 4.21		•
208056	36	Set Heating element 4.21	•	•
208051	29,30	Set Anode 4.21	•	•
109003	31	Flange seal 4.21	•	•
208063	32,31,33,63	Set Flange 4.21	•	•
108932	34	Thermostat 4.21	•	•
208049	15	Set Fan motor 4.21	•	•
109783	3	High pressure switch 4.21	•	•
109784	2	Electronic expansion valve 4.21	•	•
109778	67	Set Fan impeller 4.21	•	•
109786	68	Filter 4.21	•	•
208050	54	Set Fan guard 4.21	•	•
109767	50	Power supply cable 100l 4.21	•	
109768	50	Power supply cable 150l 4.21		•
208058	42	Set Safety valve 4.21	•	•
208048	69	Set Fin Heat Exchanger 4.21	•	•
208053	11	Set Compressor capacitor 4.21	•	•
208052	1	Set Compressor 4.21	•	•
208062	12	Transformer 4.21	•	•
109796	14	Set Controller 4.21	•	•
109794	13	Fan capacitor 4.21	•	•
208054	70	Set Fan cover 1 4.21	•	•
208055	71	Set Fan cover 2 4.21	•	•
109700	66	Nozzle plastic PA Vmax 168mm Noryl	•	•
109884	20	Ambient Air Temperature sensor AT	•	•
208059	52	Return gas temperature sensor SUT	•	•
208061	51	Exhaust temperature sensor ET	•	•
208060	53	Evaporator /coil/ temperature sensor CT	•	•
207881	4	Valve 2-way defrosting HP4.11	•	•